FEBRUARY
2023

Schiller GmbH

*ENGINEERING TO MOVE YOU FORWARD*

# STEEL SPRING ISOLATORS

P | SSI | UbPL | UPM

WWW.CFM-SCHILLER.DE


# OVERVIEW

| TYPE UBPL | LOAD RAGE [KN] | NATURAL FREQUENCY VERTICAL [HZ] | PAGE |
|---|---|---|---|
| UB 4 PL / 4 71 | 55-89 | 3,85 - 3,03 | 25 |
| UB 4 PL / 6 71 | 82-134 | | |
| UB 4 PL / 8 71 | 110-179 | | |
| UB 4 PLD1 / 4 71 | 55-89 | | |
| UB 4 PLD1 / 6 71 | 82-134 | | |
| UB 4 PLD2 / 4 71 | 55-89 | | |
| UB 4 PLD2 / 6 71 | 82-134 | | |
| UB 4 PLD2 / 8 71 | 110-179 | | |
| UB 4 PL / 4 72 | 55-89 | 2,84 - 2,23 | |
| UB 4 PL / 6 72 | 82-134 | | |
| UB 4 PL / 8 72 | 110-179 | | |
| UB 4 PLD1 / 4 72 | 55-89 | | |
| UB 4 PLD1 / 6 72 | 82-134 | | |
| UB 4 PLD2 / 4 72 | 55-89 | | |
| UB 4 PLD2 / 6 72 | 82-134 | | |
| UB 4 PLD2 / 8 72 | 110-179 | | |
| UB 4 PL / 4 73 | 55-89 | | |
| UB 4 PL / 6 73 | 82-134 | | |
| UB 4 PL / 8 73 | 110-179 | | |
| UB 4 PLD1 / 4 73 | 55-89 | | |
| UB 4 PLD1 / 6 73 | 82-134 | | |
| UB 4 PLD2 / 4 73 | 55-89 | | |
| UB 4 PLD2 / 6 73 | 82-134 | | |
| UB 4 PLD2 / 8 73 | 110-179 | | |
| UB 9 PL / 14038 | 145 | 2,5 | |

| TYPE UPM | LOAD RAGE [KN] | NATURAL FREQUENCY VERTICAL [HZ] | PAGE |
|---|---|---|---|
| UPM 4113 | 17 - 29 | 4,0 - 3,1 | 27 |
| UPM 6113 | 26 - 44 | | |
| UPM 8113 | 46 - 61 | | |
| UPM 10113 | 43 - 73 | | |
| UPM 12113 | 52 - 87 | | |

| TYPE SSI | LOAD RAGE [KN] | NATURAL FREQUENCY VERTICAL [HZ] | PAGE |
|---|---|---|---|
| 4.0-18182/D | 55 - 91 | 2,1 - 1,6 | 19 |
| 6.0-18182/D | 82 - 137 | | |
| 8.0-18182/D | 109 - 183 | | |
| 10.0-18182/D | 137 - 228 | | |
| 4.0-2575/D | 22 - 38 | 2,9 - 2,2 | 21 |
| 6.0-2575/D | 33 - 57 | | |
| 8.0-2575/D | 45 - 75 | | |
| 10.0-2575/D | 56 - 94 | | |
| 4.0-25120/D | 36 - 60 | | |
| 6.0-25120/D | 54 - 90 | | |
| 8.0-25120/D | 72 - 120 | | |
| 10.0-25120/D | 90 - 150 | | |
| 4.0-25192/D | 57 - 96 | | |
| 6.0-25192/D | 86 - 144 | | |
| 8.0-25192/D | 115 - 192 | | |
| 10.0-25192/D | 144 - 240 | | |
| 4.0-25307/D | 92 - 154 | | |
| 6.0-25307/D | 138 - 230 | | |
| 8.0-25307/D | 184 - 307 | | |
| 9.0-25307/D | 207 - 346 | | |
| 4.0-5075/D | 22 - 38 | 5,7 - 4,4 | 23 |
| 6.0-5075/D | 33 - 57 | | |
| 8.0-5075/D | 45 - 75 | | |
| 10.0-5075/D | 56 - 94 | | |
| 4.0-50120/D | 36 - 60 | 5,8 - 4,5 | |
| 6.0-50120/D | 54 - 90 | | |
| 8.0-50120/D | 72 - 120 | | |
| 10.0-50120/D | 90 - 150 | | |
| 4.0-50192/D | 57 - 96 | | |
| 6.0-50192/D | 86 - 144 | | |
| 8.0-50192/D | 115 - 192 | | |
| 10.0-50192/D | 144 - 240 | | |
| 4.0-50307/D | 92 - 154 | | |
| 6.0-50307/D | 138 - 230 | | |
| 8.0-50307/D | 184 - 307 | | |
| 10.0-50307/D | 230 - 384 | | |

| | | | | TYPE P | LOAD RAGE [KN] | NATURAL FREQUENCY VERTICAL [HZ] | PAGE | |
|---|---|---|---|---|---|---|---|---|
| | | | | P51/122 | 0,07 - 0,11 | 3,3 - 2,6 | 11 | |
| | | | | P51/124 | 0,26 - 0,43 | 3,1 - 2,4 | | |
| | | | | P51/126 | 0,47 - 0,79 | 3,2 - 2,5 | | |
| | | | | P51/117 | 0,75 - 1,25 | 3,5 - 2,7 | | |
| | | | | P60/126 | 0,47 - 0,79 | 3,2 - 2,5 | 12 | |
| | | | | P60/137 | 0,68 - 1,13 | 2,8 - 2,1 | | |
| | | | | P60/117 | 0,75 - 1,25 | 3,5 - 2,7 | | |
| | | | | P60/128 | 1,13 - 1,88 | 3,0 - 2,3 | | |
| | | | | P60/119 | 1,28 - 2,14 | 1,28 - 2,14 | | |
| | | | | P60/129 | 1,34 - 2,23 | 3,3 - 2,5 | | |
| | | | | P60/1111 | 2,10 - 3,50 | 4,0 - 3,1 | | |
| | | | | P60/1112 | 2,54 - 4,23 | 4,0 - 3, | | |
| P71D/128 | 1,13 - 1,88 | 3,0 - 2,3 | 16 | P71/128 | 1,13 - 1,88 | 3,0 - 2,3 | 13 | |
| P71D/129 | 1,34 - 2,23 | 3,3 - 2,5 | | P71/129 | 1,34 - 2,23 | 3,3 - 2,5 | | |
| P71D/1211 | 1,89 - 3,15 | 3,2 - 2,5 | | P71/1211 | 1,89 - 3,15 | 3,2 - 2,5 | | |
| P71D/1312 | 3,04 - 5,06 | 2,6 - 2,0 | | P71/1312 | 3,04 - 5,06 | 2,6 - 2,0 | | |
| P71D/1226 | 3,30 - 5,49 | 6,1 - 4,7 | | P71/1226 | 3,30 - 5,49 | 6,1 - 4,7 | | |
| P71D/1213 | 4,20 - 7,00 | 3,2 - 2,5 | | P71/1213 | 4,20 - 7,00 | 3,2 - 2,5 | | |
| P71D/1113 | 4,36 - 7,27 | 4,0 - 3,1 | | P71/1113 | 4,36 - 7,27 | 4,0 - 3,1 | | |
| P71D/1228 | 5,70 - 9,50 | 6,1 - 4,7 | | P71/1228 | 5,70 - 9,50 | 6,1 - 4,7 | | |
| P80D/429 | 5,36 - 8,93 | 3,3 - 2,5 | 17 | P80/1512 | 2,76 - 4,60 | 1,9 - 1,5 | | PREFERRED RANGE |
| P80D/2312 | 6,08 - 10,13 | 2,6 - 2,0 | | P80/1413 | 4,5 - 7,59 | 2,3 - 1,8 | | |
| P80D/2213 | 8,39 - 13,99 | 3,2 - 2,5 | | P80/429 | 5,36 - 8,93 | 3,3 - 2,5 | | |
| P80D/2113 | 8,72 - 14,53 | 4,0 - 3,1 | | P80/2312 | 6,08 - 10,13 | 2,6 - 2,0 | | |
| P80D/4312 | 12,15 - 20,25 | 2,6 - 2,0 | | P80/2213 | 8,39 - 13,99 | 3,2 - 2,5 | | |
| P80D/4213 | 16,79 - 27,98 | 3,1 - 2,5 | | P80/2113 | 8,72 - 14,53 | 4,0 - 3,1 | | |
| P80D/4113 | 17,44 - 29,06 | 4,0 - 3,1 | | P80/3312 | 9,11 - 15,19 | 2,6 - 2,0 | | |
| | | | | P80/4312 | 12,15 - 20,25 | 2,6 - 2,0 | | |
| | | | | P80/4213 | 16,79 - 27,98 | 3,1 - 2,5 | | |
| | | | | P80/4113 | 17,44 - 29,06 | 4,0 - 3,1 | | |
| P80D/437 | 2,72 - 4,54 | 2,8 - 2,2 | 17 | P80/437 | 2,72 - 4,54 | 2,8 - 2,2 | 15 | FURTHER STRUCTURAL SHAPES |
| P80D/4211 | 7,56 - 12,60 | 3,2 - 2,5 | | P80/3211 | 5,67 - 9,45 | 3,2 - 2,5 | | |
| P80D/4111 | 8,39 - 13,99 | 4,1 - 3,1 | | P80/519 | 6,41 - 10,69 | 3,9 - 3,0 | | |
| P80D/4112 | 10,15 - 16,91 | 4,0 - 3,1 | | P80/529 | 6,69 - 11,16 | 3,3 - 2,5 | | |
| | | | | P80/4211 | 7,56 - 12,60 | 3,2 - 2,5 | | |
| | | | | P80/4111 | 8,39 - 13,99 | 4,1 - 3,1 | | |
| | | | | P80/5211 | 9,45 - 15,75 | 3,2 - 2,5 | | |
| | | | | P80/3226 | 9,89 - 16,48 | 6,1 - 4,7 | | |
| | | | | P80/4112 | 10,15 - 16,91 | 4,0 - 3,1 | | |
| | | | | P80/5111 | 10,49 - 17,48 | 4,1 - 3,1 | | |
| | | | | P80/3213 | 12,59 - 20,98 | 3,2 - 2,5 | | |
| | | | | P80/3113 | 13,08 - 21,80 | 4,0 - 3,1 | | |


# MEASURING METHOD

*We measure vibrations which occur on buildings or machines using state-of-the-art measuring equipment.*

The acceleration that occurs is measured with highly sensitive sensors. The results of these measurements form the dimensioning of the required vibration isolation components. This process is carried out according to DIN 4150, which defines this type of measurement and evaluation in buildings. Measuring vibration acceleration/vibration speed is indispensable, particularly when designing the vibration isolation of high-precision and highly sensitive plants and equipment.

For the vibration isolation of machines and plants we offer various series and types of steel springs. Selection of the appropriate isolator depends on the required payload and the occuring frequencies. Steel spring isolators can achieve natural frequencies ranging from 2 to 6 Hz. In contrast to air springs steel spring isolators cannot be controlled in level.

Our steel spring isolators contain helical steel springs complying to DIN 2089 Part 1. The tolerances at the fabrication of steel springs are based on quality grade 2 DIN 2095. All housings of our steel spring isolators are painted in light grey (RAL 7035). On demand, your steel spring isolators will be painted in different RAL-colours.

Our standard steel spring isolators contain integrated level elements, which allow you to level your plant. The extensive use of shims is no longer necessary. Another benefit of the level elements is the simplified mounting of the isolators. The level elements of a steel spring isolator are reduced in heights till they fit under the machine or foundation. By the use of a hydraulic jack parallel to the level elements they are released and can be leveled to the nominal heights. No pretension in a load frame for the mounting of the steel spring isolators is necessary.

**» Steel spring isolators are an inexpensive way to Test stands, presses, punching as well as all types of machines with vibration isolation. «**

# STEEL SPRING ISOLATORS

## STEEL SPRING ISOLATORS WITH OR WITHOUT INTEGRATED VISCOSE DAMPING

**CFM Schiller** produces steel spring isolators with or without integrated viscous damping. They are primarily applied for supports of plants and machines that have an excitation frequency above approx. 3 Hz or that emit impulse excitations. The viscous damper plays a key role in the successful vibration isolation. The natural frequencies of our steel spring isolators range from 1.5 Hz to 6.1 Hz, depending on the type. In addition to the standard types, **CFM Schiller** also designs and manufactures isolators and dampers that specifically suit your application. These special designs can include isolators and dampers made from corrosion-resistant materials. Our in-house TÜV-certified testing laboratory enables us at **CFM Schiller** to verify the quality of our produced products and to perform fatigue tests on them.

**CFM Schiller** produces steel spring isolators in 4 standard types, which are all quickly shippable. By applying highly automated production processes, we are able to offer products of high quality with an optimal price-performance ratio.

# STEEL SPRING ISOLATORS

*Steel spring isolators have a wide field of application. There are a lot of reasons to use steel spring isolators. Mostly they are used to protect people or buildings from harmful vibrations. Therefore the steel spring isolators are located under the machine bed or - if a seismic mass is necessary - under the concrete foundation.*

*If you have special requirements to your steel spring isolators, please don't hesitate to inform us. We have a lot of experience in solute customers challenges. E. g. if you want to operate steel spring isolators under harmful environments, we can offer you galvanised bodies as well as compression springs with increased corrosion protection up to seawater-resistant design. Furthermore a design with rubber protection cab against dust, dirt and oil is available.*

**P-SERIES**
Our „Small Ones". These isolators are designed for the load range up to 3 tons. The steel spring isolators of our series P51 have a compact plastic housing, series P60, P71 and P80 a compact cast steel housing.

**SSI-SERIES**
Our „Standard". These steel spring isolators are designed to isolate large presses, grinding machines and test stands. Due to the wide range of payloads from 23kN to 384kN, smaller mounting plates and machines can be isolated also. The natural frequency can vary from 1.8 - 5.8Hz to optimize the isolation to your application.

**UBPL-SERIES**
Our efficient „Alternative". The series UbPL is specially designed according our customer specifications. The natural frequencies range is between 1.75 and 3.85 Hz and they can be delivered with integrated viscous damper. The main field of applications are coal mills or press machines. Of course there are also other applications possible.

**UPM-SERIES**
Our „Specialists". The series UPM is designed to install directly underneath a machine. The benefit of these isolators is the very low installation height.

**VISCOUS DAMPER**
Viscous dampers are used parallel to steel springs to increase the damping ratio. Viscous dampers shorten the decay time of the caused vibrations.

Viscous dampers are using the principal of fluid friction to reduce the amplitudes of a vibration. Therefore a piston is put into a viscous medium. The dampers have 6 DOF. According to your request, our dampers are designed.

# STEEL SPRING ISOLATOR P

Our „Small Ones". These isolators are designed for the load range up to 3 tons. The steel spring isolators of our series P51 have a compact plastic housing, series P60, P71 and P80 a compact cast steel housing.

## STEEL SPRING ISOLATOR **P51**

**The steel spring isolators of our series P51** have a compact plastic housing, that covers the steel spring completely.

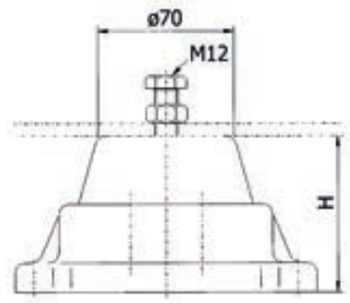


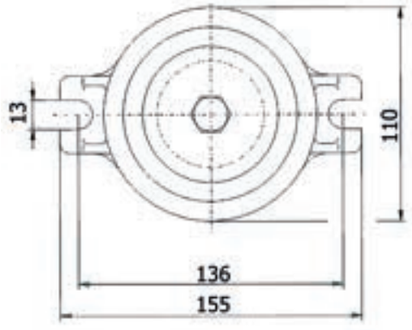


### TECHNICAL DATA

| TYP | LOAD RAGE [kN] | STIFFNESS verical [N/mm] | STIFFNESS horiziontal [N/mm] | NATURAL FREQUENCY vertical [Hz] | HEIGHT H AT DELIVERY [mm] | HEIGHT H UNDER LOAD [mm] | WEIGHT approx. [kg] |
|---|---|---|---|---|---|---|---|
| **P51/122** | 0,07 - 0,11 | 3 | 2 | 3,3 - 2,6 | 98 | 72-57 | 0,7 |
| **P51/124** | 0,26 - 0,43 | 10 | 2 | 3,1 - 2,4 | 98 | 87 - 70 | |
| **P51/126** | 0,47 - 0,79 | 19 | 15 | 3,2 - 2,5 | 98 | 88 - 72 | |
| **P51/117** | 0,75 - 1,25 | 37 | 40 | 3,5 - 2,7 | 98 | 88 - 74 | |

# STEEL SPRING ISOLATOR
# **P60**

**Steel spring isolators of our series P60** consist, of a compact cast housing, which is coated to protect against corrosion.

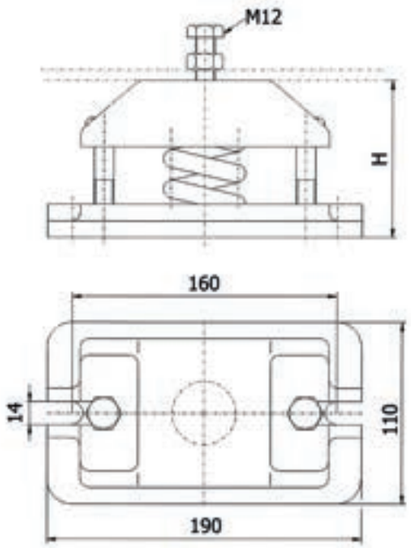


## TECHNICAL DATA

| TYP | LOAD RAGE [kN] | STIFFNESS verical [N/mm] | STIFFNESS horiziontal [N/mm] | NATURAL FREQUENCY vertical [Hz] | HEIGHT H AT DELIVERY [mm] | HEIGHT H UNDER LOAD [mm] | WEIGHT approx. [kg] |
|---|---|---|---|---|---|---|---|
| **P60/126** | 0,47 - 0,79 | 19 | 15 | 3,2 - 2,5 | 111 | 86 - 70 | |
| **P60/137** | 0,68 - 1,13 | 21 | 12 | 2,8 - 2,1 | 141 | 109 - 87 | |
| **P60/117** | 0,75 - 1,25 | 37 | 40 | 3,5 - 2,7 | 106 | 86 - 72 | |
| **P60/128** | 1,13 - 1,88 | 41 | 29 | 3,0 - 2,3 | 131 | 103 - 85 | |
| **P60/119** | 1,28 - 2,14 | 76 | 58 | 3,8 - 3,0 | 119 | 102 - 91 | 3,7 |
| **P60/129** | 1,34 - 2,23 | 57 | 46 | 3,3 - 2,5 | 131 | 108 - 92 | |
| **P60/1111** | 2,10 - 3,50 | 138 | 110 | 4,0 - 3,1 | 128 | 113 - 103 | |
| **P60/1112** | 2,54 - 4,23 | 161 | 130 | 4,0 - 3,0 | 136 | 120 - 110 | |

# STEEL SPRING ISOLATOR
# **P71**

**Steel spring isolators of our series P71** consist of a compact cast housing, which is coated to protect against corrosion.

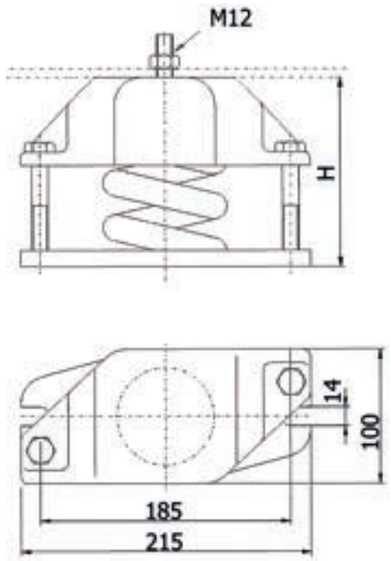


## TECHNICAL DATA

| TYP | LOAD RAGE [kN] | STIFFNESS verical [N/mm] | STIFFNESS horiziontal [N/mm] | NATURAL FREQUENCY vertical [Hz] | HEIGHT H AT DELIVERY [mm] | HEIGHT H UNDER LOAD [mm] | WEIGHT approx. [kg] |
|---|---|---|---|---|---|---|---|
| **P71/128** | 1,13 - 1,88 | 41 | 29 | 3,0 - 2,3 | 130 | 102 - 84 | |
| **P71/129** | 1,34 - 2,23 | 57 | 46 | 3,3 - 2,5 | 130 | 107 - 91 | |
| **P71/1211** | 1,89 - 3,15 | 76 | 23 | 3,2 - 2,5 | 177 | 152 - 136 | |
| **P71/1312** | 3,04 - 5,06 | 84 | 31 | 2,6 - 2,0 | 195 | 159 - 135 | |
| **P71/1226** | 3,30 - 5,49 | 488 | 586 | 6,1 - 4,7 | 95 | 88 - 84 | 4 |
| **P71/1213** | 4,20 - 7,00 | 169 | 88 | 3,2 - 2,5 | 180 | 155 - 139 | |
| **P71/1113** | 4,36 - 7,27 | 277 | 277 | 4,0 - 3,1 | 134 | 118 - 108 | |
| **P71/1228** | 5,70 - 9,50 | 845 | 594 | 6,1 - 4,7 | 104 | 97 - 93 | |

# STEEL SPRING ISOLATOR
# P80

**Steel spring isolators of our series P80** consist, of a compact cast housing, which is coated to protect against corrosion.

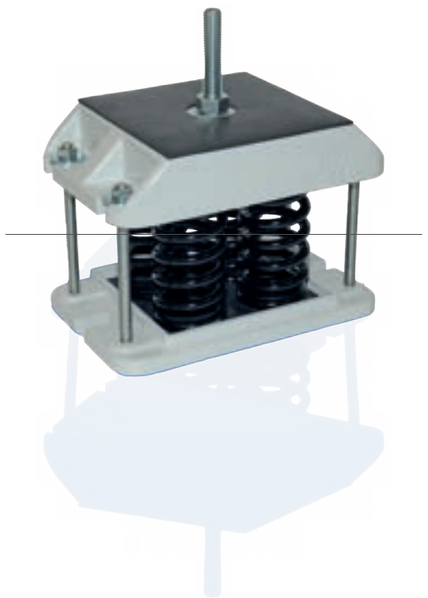

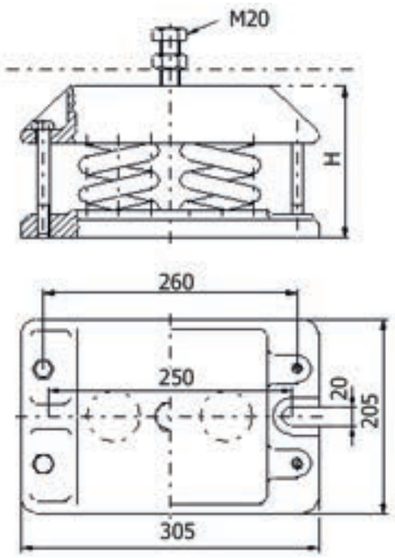


## TECHNICAL DATA

| | TYP | LOAD RAGE [kN] | STIFFNESS verical [N/mm] | STIFFNESS horiziontal [N/mm] | NATURAL FREQUENCY vertical [Hz] | HEIGHT H AT DELIVERY [mm] | HEIGHT H UNDER LOAD [mm] | WEIGHT approx. [kg] |
|---|---|---|---|---|---|---|---|---|
| PREFERRED RANGE | **P80/1512** | 2,76 - 4,60 | 41 | 20 | 1,9 - 1,5 | 290 | 223 - 178 | |
| | **P80/1413** | 4,5 - 7,59 | 95 | 77 | 2,3 - 1,8 | 236 | 188 - 156 | |
| | **P80/429** | 5,36 - 8,93 | 228 | 184 | 3,3 - 2,5 | 140 | 117 - 101 | |
| | **P80/2312** | 6,08 - 10,13 | 168 | 62 | 2,6 - 2,0 | 205 | 169 - 145 | |
| | **P80/2213** | 8,39 - 13,99 | 338 | 176 | 3,2 - 2,5 | 190 | 165 - 149 | |
| | **P80/2113** | 8,72 - 14,53 | 554 | 554 | 4,0 - 3,1 | 144 | 128 - 118 | |
| | **P80/3312** | 9,11 - 15,19 | 252 | 93 | 2,6 - 2,0 | 205 | 169 - 145 | |
| | **P80/4312** | 12,15 - 20,25 | 336 | 124 | 2,6 - 2,0 | 205 | 169 - 145 | |
| | **P80/4213** | 16,79 - 27,98 | 676 | 352 | 3,1 - 2,5 | 190 | 165 - 149 | |
| | **P80/4113** | 17,44 - 29,06 | 1108 | 1108 | 4,0 - 3,1 | 144 | 128 - 118 | |
| FURTHER STRUCTURAL SHAPES | **P80/437** | 2,72 - 4,54 | 84 | 48 | 2,8 - 2,2 | 150 | 118 - 96 | |
| | **P80/3211** | 5,67 - 9,45 | 228 | 69 | 3,2 - 2,5 | 187 | 162 - 146 | |
| | **P80/519** | 6,41 - 10,69 | 380 | 290 | 3,9 - 3,0 | 128 | 111 - 100 | |
| | **P80/529** | 6,69 - 11,16 | 285 | 230 | 3,3 - 2,5 | 140 | 117 - 101 | |
| | **P80/4211** | 7,56 - 12,60 | 304 | 92 | 3,2 - 2,5 | 187 | 162 - 146 | |
| | **P80/4111** | 8,39 - 13,99 | 552 | 440 | 4,1 - 3,1 | 137 | 122 - 112 | |
| | **P80/5211** | 9,45 - 15,75 | 380 | 115 | 3,2 - 2,5 | 187 | 162 - 146 | |
| | **P80/3226** | 9,89 - 16,48 | 1464 | 1758 | 6,1 - 4,7 | 105 | 98 - 94 | |
| | **P80/4112** | 10,15 - 16,91 | 644 | 520 | 4,0 - 3,1 | 145 | 129 - 119 | |
| | **P80/5111** | 10,49 - 17,48 | 690 | 550 | 4,1 - 3,1 | 137 | 122 - 112 | |
| | **P80/3213** | 12,59 - 20,98 | 507 | 264 | 3,2 - 2,5 | 190 | 165 - 149 | |
| | **P80/3113** | 13,08 - 21,80 | 831 | 831 | 4,0 - 3,1 | 144 | 128 - 118 | |

20

# STEEL SPRING ISOLATOR
# P71D

**Steel spring isolators of our series P71D** consist of a compact cast housing, which is coated to protect against corrosion. In addition to the P71 series they integrate a viscous damper also.

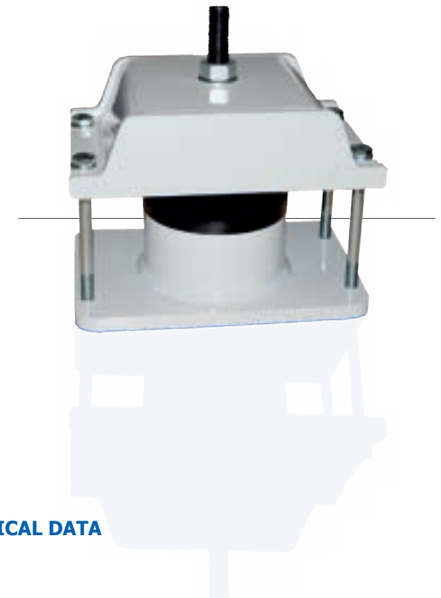

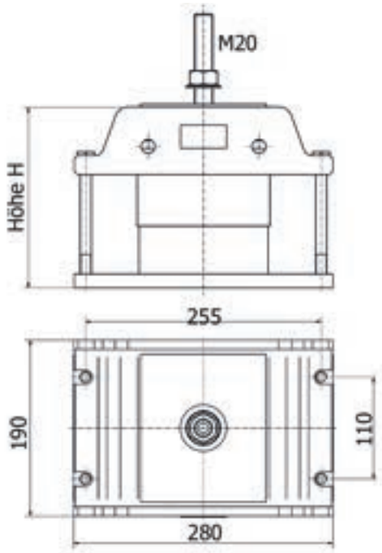


## TECHNICAL DATA

| TYP | LOAD RAGE [kN] | STIFFNESS verical [N/mm] | STIFFNESS horiziontal [N/mm] | NATURAL FREQUENCY vertical [Hz] | HEIGHT H AT DELIVERY [mm] | HEIGHT H UNDER LOAD [mm] | WEIGHT approx. [kg] |
|---|---|---|---|---|---|---|---|
| P71D/128 | 0,47 - 0,79 | 41 | 29 | 3,0 - 2,3 | 150 | 122 - 104 | 20 |
| P71D/129 | 1,34 - 2,23 | 57 | 46 | 3,3 - 2,5 | 150 | 127 - 111 | |
| P71D/1211 | 1,89 - 3,15 | 76 | 23 | 3,2 - 2,5 | 197 | 172 - 156 | |
| P71D/1312 | 3,04 - 5,06 | 84 | 31 | 2,6 - 2,0 | 215 | 179 - 155 | |
| P71D/1226 | 3,30 - 5,49 | 488 | 586 | 6,1 - 4,7 | 115 | 108 - 104 | |
| P71D/1213 | 4,20 - 7,00 | 169 | 88 | 3,2 - 2,5 | 200 | 175 - 159 | |
| P71D/1113 | 4,36 - 7,27 | 277 | 277 | 154 | 154 | 138 - 128 | |
| P71D/1228 | 5,70 - 9,50 | 845 | 594 | 6,1 - 4,7 | 124 | 117 - 113 | |

# STEEL SPRING ISOLATOR
# P80D

**Steel spring isolators of our series P80D** consist of a compact cast housing, which is coated to protect against corrosion. In addition to the P80 series they integrate a viscous damper also.

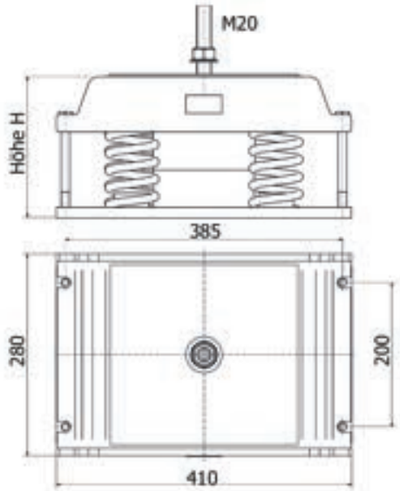


## TECHNICAL DATA

| | TYP | LOAD RAGE [kN] | STIFFNESS verical [N/mm] | STIFFNESS horiziontal [N/mm] | NATURAL FREQUENCY vertical [Hz] | HEIGHT H AT DELIVERY [mm] | HEIGHT H UNDER LOAD [mm] | WEIGHT approx. [kg] |
|---|---|---|---|---|---|---|---|---|
| PREFERRED RANGE | P80D/429 | 5,36 - 8,93 | 228 | 184 | 3,3 - 2,5 | 150 | 127 - 111 | 42 |
| | P80D/2312 | 6,08 - 10,13 | 168 | 62 | 2,6 - 2,0 | 215 | 179 - 155 | 40 |
| | P80D/2213 | 8,39 - 13,99 | 338 | 176 | 3,2 - 2,5 | 200 | 175 - 159 | |
| | P80D/2113 | 8,72 - 14,53 | 554 | 554 | 4,0 - 3,1 | 154 | 138 - 128 | |
| | P80D/4312 | 12,15 - 20,25 | 336 | 124 | 2,6 - 2,0 | 215 | 179 - 155 | 42 |
| | P80D/4213 | 16,79 - 27,98 | 676 | 352 | 3,1 - 2,5 | 200 | 175 - 159 | |
| | P80D/4113 | 17,44 - 29,06 | 1108 | 1108 | 4,0 - 3,1 | 154 | 138 - 128 | |
| FURTHER STRUCTURAL SHAPES | P80D/437 | 2,72 - 4,54 | 84 | 48 | 2,8 - 2,2 | 160 | 128 - 106 | |
| | P80D/4211 | 7,56 - 12,60 | 304 | 92 | 3,2 - 2,5 | 197 | 172 - 156 | |
| | P80D/4111 | 8,39 - 13,99 | 552 | 440 | 4,1 - 3,1 | 147 | 132 - 122 | |
| | P80D/4112 | 10,15 - 16,91 | 644 | 520 | 4,0 - 3,1 | 155 | 139 - 129 | |

# STEEL SPRING ISOLATORS SERIES SSI/ SSI-D

Our steel spring isolators allow you to isolate a wide range of machines, presses and test rigs. From small mounting plates and midsized test rigs up to heavy presses located on huge concrete foundations. To match this wide range of requirements three ranges of natural frequencies are available:

» 1.8 Hz: to get the best degree of isolation that is possible with steel springs

» 2.5 Hz: to get the best compromise between degree of isolation and stability for your machines and plants

» 5.0 Hz: to get enough vertical stiffness to withstand the shock excitation of presses and shredders.

In order to reduce the amplitudes to tolerable values. Due to the same working height of the types SSI and SSI-D (integrated damper), different isolators can be combined to get the best vibration isolation system for your application. All three ranges of natural frequencies are available in a wide range of payloads. To protect the covers from corrosion the isolators are painted (light grey, RAL 7035).

## STEEL SPRING ISOLATOR **SSI/ SSI-D 1,8 HZ**

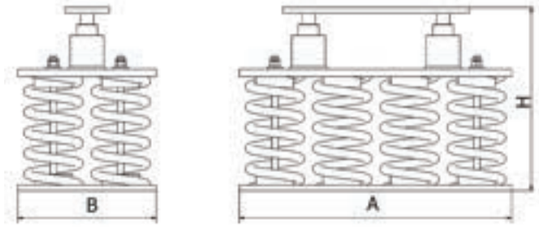


STEEL SPRING ISOLATOR **SERIES SSI 1,8 HZ**

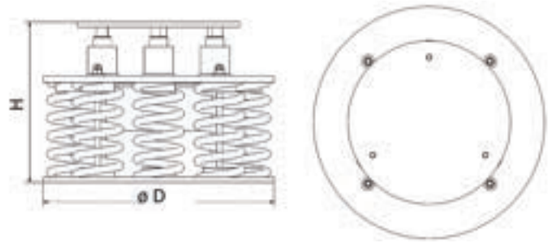


STEEL SPRING ISOLATOR **SERIES SSI-D 1,8 HZ**

**TECHNICAL DATA** (SSI/ SSI-D 1,8 HZ):

| **HEIGHT H** [MM] | |
|---|---|
| HEIGHT WITHOUT LOAD | 490 |
| WORKING HEIGHT | 434 - 396 |
| HIGHT AT DELIVERY | 487 |
| SETTING RANGE LEVELING ELEMENTS [MM] | ±25 |
| DAMPING (SERIE D) | 0,15 |

### TECHNICAL DATA

| TYP | LOAD RAGE [kN] | STIFFNESS verical [N/mm] | STIFFNESS horiziontal [N/mm] | NATURAL FREQUENCY vertical [Hz] | A [mm] | B [mm] | C [mm] | WEIGHT approx. [kg] |
|---|---|---|---|---|---|---|---|---|
| **SSI-4.0-18182** | 55 - 91 | 970 | 540 | 2,1 - 1,6 | 340 | 340 | | 94 |
| **SSI-6.0-18182** | 82 - 137 | 1460 | 810 | 2,1 - 1,6 | 512 | 340 | | 132 |
| **SSI-8.0-18182** | 109 - 183 | 1940 | 1080 | 2,1 - 1,6 | 680 | 340 | | 172 |
| **SSI-10.0-18182** | 137 - 228 | 2430 | 1350 | 2,1 - 1,6 | 825 | 415 | | 230 |
| **SSI-4.0-18182-D** | 55 - 91 | 970 | 540 | 2,1 - 1,6 | | | 710 | 172 |
| **SSI-6.0-18182-D** | 82 - 137 | 1460 | 810 | 2,1 - 1,6 | | | 710 | 235 |
| **SSI-8.0-18182-D** | 109 - 183 | 1940 | 1080 | 2,1 - 1,6 | | | 710 | 258 |
| **SSI-10.0-18182-D** | 137 - 228 | 2430 | 1350 | 2,1 - 1,6 | | | 850 | 327 |

# STEEL SPRING ISOLATOR
# SSI/ SSI-D 2,5 HZ

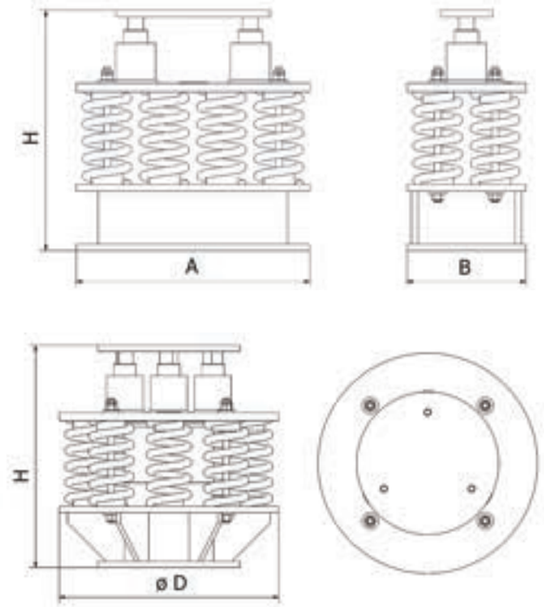


STEEL SPRING ISOLATOR
**SERIES SSI 2,5 HZ**

STEEL SPRING ISOLATOR
**SERIES SSI-D 2,5 HZ**

**TECHNICAL DATA** (SSI/ SSI-D 2,5 HZ):

| **HEIGHT H** [MM] | |
|---|---|
| HEIGHT WITHOUT LOAD | 545 |
| WORKING HEIGHT | 495 - 515 |
| HIGHT AT DELIVERY | 542 |
| SETTING RANGE LEVELING ELEMENTS [MM] | ±25 |
| DAMPING (SERIE D) | 0,15 |

## TECHNICAL DATA

| **TYP** | **LOAD RAGE** [kN] | **STIFFNESS** verical [N/mm] | **STIFFNESS** horiziontal [N/mm] | **NATURAL FREQUENCY** vertical [Hz] | **A** [mm] | **B** [mm] | **C** [mm] | **WEIGHT** approx. [kg] |
|---|---|---|---|---|---|---|---|---|
| **SSI-4.0-2575** | 22 - 38 | 750 | 140 | 2,9 - 2,2 | 180 | 180 | | 38 |
| **SSI-6.0-2575** | 33 - 57 | 1130 | 210 | | 272 | 180 | | 53 |
| **SSI-8.0-2575** | 45 - 75 | 1550 | 280 | | 362 | 180 | | 68 |
| **SSI-10.0-2575** | 56 - 94 | 1880 | 350 | | 370 | 250 | | 88 |
| **SSI-4.0-2575-D** | 22 - 38 | 750 | 140 | 2,9 - 2,2 | | | 420 | 53 |
| **SSI-6.0-2575-D** | 33 - 57 | 1130 | 210 | | | | 420 | 103 |
| **SSI-8.0-2575-D** | 45 - 75 | 1500 | 280 | | | | 420 | 107 |
| **SSI-10.0-2575-D** | 56 - 94 | 1880 | 350 | | | | 460 | 130 |
| **SSI-4.0-25120** | 36 - 60 | 1190 | 580 | 2,9 - 2,2 | 240 | 240 | | 53 |
| **SSI-6.0-25120** | 54 - 90 | 1780 | 870 | | 360 | 240 | | 78 |
| **SSI-8.0-25120** | 72 - 120 | 2370 | 1150 | | 480 | 240 | | 114 |
| **SSI-10.0-25120** | 90 - 150 | 2970 | 144 | | 585 | 290 | | 142 |
| **SSI-4.0-25120-D** | 36 - 60 | 1190 | 580 | 2,9 - 2,2 | | | 520 | 135 |
| **SSI-6.0-25120-D** | 54 - 90 | 1780 | 870 | | | | 520 | 145 |
| **SSI-8.0-25120-D** | 72 - 120 | 2370 | 1150 | | | | 540 | 160 |
| **SSI-10.0-25120-D** | 90 - 150 | 2970 | 1440 | | | | 540 | 205 |
| **SSI-4.0-25192** | 57 - 96 | 1950 | 2250 | 2,9 - 2,2 | 390 | 390 | | 133 |
| **SSI-6.0-25192** | 86 - 144 | 2920 | 3370 | | 590 | 390 | | 200 |
| **SSI-8.0-25192** | 115 - 192 | 3900 | 4490 | | 785 | 390 | | 322 |
| **SSI-10.0-25192** | 144 - 240 | 4870 | 5620 | | 785 | 535 | | 420 |
| **SSI-4.0-25192-D** | 57 - 96 | 1950 | 2250 | 2,9 - 2,2 | | | 760 | 265 |
| **SSI-6.0-25192-D** | 86 - 144 | 2920 | 3370 | | | | 760 | 290 |
| **SSI-8.0-25192-D** | 115 - 192 | 3900 | 4490 | | | | 780 | 265 |
| **SSI-10.0-25192-D** | 144 - 240 | 4870 | 5620 | | | | 930 | 345 |
| **SSI-4.0-25307** | 92 - 154 | 3090 | 5420 | 2,9 - 2,2 | 565 | 565 | | 274 |
| **SSI-6.0-25307** | 138 - 230 | 4640 | 8140 | | 850 | 565 | | 410 |
| **SSI-8.0-25307** | 184 - 307 | 6180 | 10850 | | 850 | 850 | | 556 |
| **SSI-9.0-25307** | 207 - 346 | 6960 | 12200 | | 850 | 850 | | 580 |
| **SSI-4.0-25307-D** | 92 - 154 | 3090 | 5420 | 2,9 - 2,2 | | | 1130 | 520 |
| **SSI-6.0-25307-D** | 138 - 230 | 4640 | 8140 | | | | 1130 | 570 |
| **SSI-8.0-25307-D** | 184 - 307 | 6180 | 10850 | | | | 1130 | 620 |
| **SSI-9.0-25307-D** | 207 - 346 | 6960 | 12200 | | | | 1220 | 695 |

# STEEL SPRING ISOLATOR
# SSI/ SSI-D 5 HZ

STEEL SPRING ISOLATOR
**SERIES SSI 5 HZ**

STEEL SPRING ISOLATOR
**SERIES SSI-D 5 HZ**

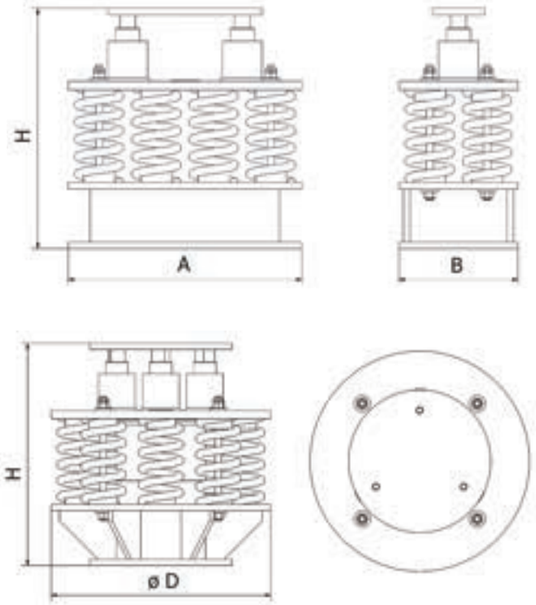


## TECHNICAL DATA (SSI/ SSI-D 5 HZ):

| HEIGHT H [MM] | |
|---|---|
| HEIGHT WITHOUT LOAD | 480 |
| WORKING HEIGHT | 472,5 - 467,5 |
| HIGHT AT DELIVERY | 477 |
| SETTING RANGE LEVELING ELEMENTS [MM] | ±25 |
| DAMPING (SERIE D) | 0,15 |

## TECHNICAL DATA

| TYP | LOAD RAGE [kN] | STIFFNESS verical [N/mm] | STIFFNESS horiziontal [N/mm] | NATURAL FREQUENCY vertical [Hz] | A [mm] | B [mm] | Ø D [mm] | WEIGHT approx. [kg] |
|---|---|---|---|---|---|---|---|---|
| **SSI-4.0-5075** | 22 - 38 | 2960 | 1480 | 5,7 - 4,4 | 175 | 175 | | 37 |
| **SSI-6.0-5075** | 33 - 57 | 4440 | 2220 | | 265 | 175 | | 53 |
| **SSI-8.0-5075** | 45 - 75 | 5920 | 2960 | | 350 | 175 | | 72 |
| **SSI-10.0-5075** | 56 - 94 | 7400 | 3700 | | 350 | 235 | | 85 |
| **SSI-4.0-5075-D** | 22 - 38 | 2960 | 1480 | 5,7 - 4,4 | | | 430 | 86 |
| **SSI-6.0-5075-D** | 33 - 57 | 4440 | 2220 | | | | 430 | 106 |
| **SSI-8.0-5075-D** | 45 - 75 | 5920 | 2960 | | | | 430 | 109 |
| **SSI-10.0-5075-D** | 56 - 94 | 7400 | 3700 | | | | 510 | 140 |
| **SSI-4.0-50120** | 36 - 60 | 4820 | 6640 | 5,8 - 4,5 | 350 | 350 | | 111 |
| **SSI-6.0-50120** | 54 - 90 | 7230 | 9960 | | 525 | 350 | | 165 |
| **SSI-8.0-50120** | 72 - 120 | 9640 | 13280 | | 705 | 350 | | 218 |
| **SSI-10.0-50120** | 90 - 150 | 12050 | 16610 | | 845 | 425 | | 296 |
| **SSI-4.0-50120-D** | 36 - 60 | 4820 | 6640 | 5,8 - 4,5 | | | 730 | 248 |
| **SSI-6.0-50120-D** | 54 - 90 | 7230 | 9960 | | | | 730 | 269 |
| **SSI-8.0-50120-D** | 72 - 120 | 9640 | 13280 | | | | 730 | 291 |
| **SSI-10.0-50120-D** | 90 - 150 | 12050 | 16610 | | | | 850 | 370 |
| **SSI-4.0-50192** | 57 - 96 | 7730 | 7510 | 5,8 - 4,5 | 270 | 270 | | 73 |
| **SSI-6.0-50192** | 86 - 144 | 11590 | 11260 | | 405 | 270 | | 107 |
| **SSI-8.0-50192** | 115 - 192 | 15460 | 15010 | | 545 | 270 | | 141 |
| **SSI-10.0-50192** | 144 - 240 | 19320 | 18760 | | 545 | 375 | | 176 |
| **SSI-4.0-50192-D** | 57 - 96 | 7730 | 7510 | 5,8 - 4,5 | | | 650 | 193 |
| **SSI-6.0-50192-D** | 86 - 144 | 11590 | 11260 | | | | 650 | 207 |
| **SSI-8.0-50192-D** | 115 - 192 | 15460 | 15010 | | | | 650 | 220 |
| **SSI-10.0-50192-D** | 144 - 240 | 19320 | 18760 | | | | 780 | 294 |
| **SSI-4.0-50307** | 92 - 154 | 12560 | 14300 | 5,8 - 4,5 | 300 | 300 | | 93 |
| **SSI-6.0-50307** | 138 - 230 | 18840 | 21450 | | 455 | 300 | | 136 |
| **SSI-8.0-50307** | 184 - 307 | 25120 | 28600 | | 610 | 300 | | 178 |
| **SSI-10.0-50307** | 230 - 384 | 31400 | 35750 | | 610 | 415 | | 222 |
| **SSI-4.0-50307-D** | 92 - 154 | 12560 | 14300 | 5,8 - 4,5 | | | 690 | 222 |
| **SSI-6.0-50307-D** | 138 - 230 | 18840 | 21450 | | | | 690 | 244 |
| **SSI-8.0-50307-D** | 184 - 307 | 25120 | 28600 | | | | 690 | 262 |
| **SSI-10.0-50307-D** | 230 - 384 | 31400 | 35750 | | | | 820 | 340 |

# STEEL SPRING ISOLATORS SERIES UBPL/ UBPLD

Our efficient "alternative". The natural frequencies range from 1.75 to 3.85 Hz and can also be supplied with an integrated viscous damper. Their main areas of application are coal mills and large presses. Of course, other applications are also possible.

STEEL SPRING ISOLATOR
**SERIES UBPL**

STEEL SPRING ISOLATOR
**SERIES UBPLD**

### TECHNICAL DATA
(FOR ALL STEEL SPRING ISOLATORS UBPL UND UBPLD):

| **HEIGHT H** [MM] | |
|---|---|
| HEIGHT WITHOUT LOAD | 490 |
| WORKING HEIGHT | 434 - 396 |
| HIGHT AT DELIVERY | 487 |
| SETTING RANGE LEVELING ELEMENTS [MM] | ±25 |
| DAMPING (SERIE D) | 0,15 |

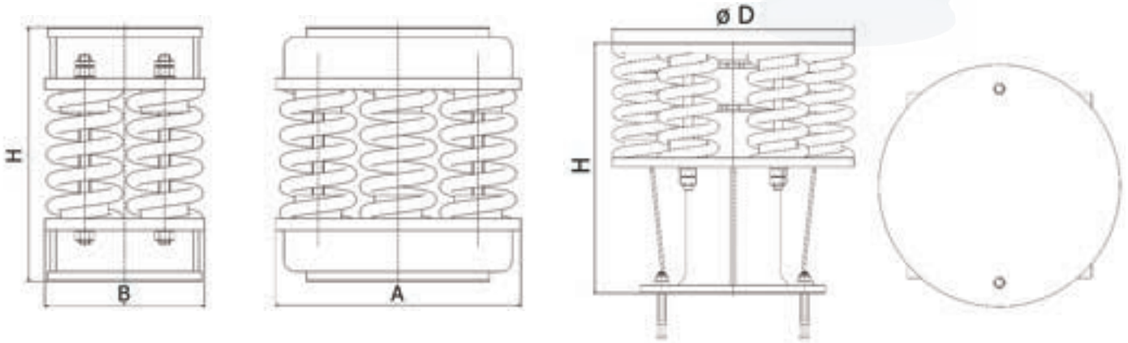


| | TYP | LOAD RAGE [kN] | STIFFNESS verical [N/mm] | STIFFNESS horiziontal [N/mm] | DAMPING RESIS-TANCE [KNS/M] | NATURAL FRE-QUENCY vertical [Hz] | HEIGHT H WITHOU LOAD [mm] | OPERA-TING HEIGHT H [mm] | A [mm] | B [mm] | C [mm] | WEIGHT approx. [kg] |
|---|---|---|---|---|---|---|---|---|---|---|---|---|
| UB 4 PL 3 HZ | **4 71** | 55 - 89 | 3260 | 4300 | | 3,85 - 3, 03 | 353 | 336 - 326 | 375 | 280 | | 85 |
| | **6 71** | 82 - 134 | 4900 | 6460 | | | | | 430 | | | 105 |
| | **8 71** | 110 - 179 | 6520 | 8610 | | | | | 580 | | | 145 |
| UB 4 PLD1 3 HZ | **4 71** | 55 - 89 | 3260 | 4300 | 350 | | 450 | 435 - 430 | | | 524 | 155 |
| | **6 71** | 82 - 134 | 4900 | 6460 | 350 | | | | | | | 170 |
| UB 4 PLD2 3 HZ | **4 71** | 55 - 89 | 3260 | 4300 | 500 | | 520 | 503 - 492 | | | 565 | 200 |
| | **6 71** | 82 - 134 | 4900 | 6460 | 500 | | | | | | | 212 |
| | **8 71** | 110 - 179 | 6520 | 8610 | 500 | | | | | | | 225 |

| | TYP | LOAD RAGE [kN] | STIFFNESS verical [N/mm] | STIFFNESS horiziontal [N/mm] | DAMPING RESIS-TANCE [KNS/M] | NATURAL FRE-QUENCY vertical [Hz] | HEIGHT H WITHOU LOAD [mm] | OPERA-TING HEIGHT H [mm] | A [mm] | B [mm] | C [mm] | WEIGHT approx. [kg] |
|---|---|---|---|---|---|---|---|---|---|---|---|---|
| UB 4 PL 2,2 HZ | **4 72** | 55 - 89 | 1780 | 1070 | | 2,84 - 2,23 | 443 | 412 - 393 | 375 | 280 | | 98 |
| | **6 72** | 82 - 134 | 2680 | 1610 | | | | | 430 | | | 128 |
| | **8 72** | 110 - 179 | 3560 | 2140 | | | | | 580 | | | 170 |
| UB 4 PLD1 2,2 HZ | **4 72** | 55 - 89 | 1780 | 1070 | 350 | | 540 | 509 - 490 | | | 524 | 175 |
| | **6 72** | 82 - 134 | 2680 | 1610 | 350 | | | | | | | 190 |
| UB 4 PLD2 2,2 HZ | **4 72** | 55 - 89 | 1780 | 1070 | 500 | | 610 | 579 - 560 | | | 565 | 220 |
| | **6 72** | 82 - 134 | 2680 | 1610 | 500 | | | | | | | 235 |
| | **8 72** | 110 - 179 | 3560 | 2140 | 500 | | | | | | | 255 |

| | TYP | LOAD RAGE [kN] | STIFFNESS verical [N/mm] | STIFFNESS horiziontal [N/mm] | DAMPING RESIS-TANCE [KNS/M] | NATURAL FRE-QUENCY vertical [Hz] | HEIGHT H WITHOU LOAD [mm] | OPERA-TING HEIGHT H [mm] | A [mm] | B [mm] | C [mm] | WEIGHT approx. [kg] |
|---|---|---|---|---|---|---|---|---|---|---|---|---|
| UB 4 PL 1,75 HZ | **4 73** | 55 - 89 | 1090 | 130 | | 2,22 - 1,75 | 568 | 517 - 486 | 375 | 280 | | 120 |
| | **6 73** | 82 - 134 | 1640 | 200 | | | | | 430 | | | 155 |
| | **8 73** | 110 - 179 | 2180 | 260 | | | | | 580 | | | 208 |
| UB 4 PLD1 1,75 HZ | **4 73** | 55 - 89 | 1090 | 130 | 350 | | 665 | 615 - 583 | | | 524 | 200 |
| | **6 73** | 82 - 134 | 1640 | 200 | 350 | | | | | | | 228 |
| UB 4 PLD2 1,75 HZ | **4 73** | 55 - 89 | 1090 | 130 | 500 | | 735 | 684 - 652 | | | 565 | 245 |
| | **6 73** | 82 - 134 | 1640 | 200 | 500 | | | | | | | 270 |
| | **8 73** | 110 - 179 | 2180 | 260 | 500 | | | | | | | 295 |

| | TYP | LOAD RAGE [kN] | STIFFNESS verical [N/mm] | STIFFNESS horiziontal [N/mm] | DAMPING RESIS-TANCE [KNS/M] | NATURAL FRE-QUENCY vertical [Hz] | HEIGHT H WITHOU LOAD [mm] | OPERA-TING HEIGHT H [mm] | A [mm] | B [mm] | C [mm] | WEIGHT approx. [kg] |
|---|---|---|---|---|---|---|---|---|---|---|---|---|
| UB 9 PL | **14038** | 145 | 3600 | 1570 | | 2,5 | 406 | 367 | 540 | 310 | | 135 |

# STEEL SPRING ISOLATORS SERIES UPM

Steel spring isolators of our series UPM consist of a compact welded structure, which is painted to against corrosion.

**TECHNICAL DATA**
(FOR ALL STEEL SPRING ISOLATORS UPM):

| **HEIGHT H** [MM] | |
|---|---|
| HEIGHT WITHOUT LOAD | 281 |
| WORKING HEIGHT | 238 - 293 |
| HIGHT AT DELIVERY | 277 |
| SETTING RANGE LEVELING ELEMENTS [MM] | -5/ +50 |

## STEEL SPRING ISOLATOR **UPM**

STEEL SPRING ISOLATOR **SERIESUPM SINGLE-ROW**

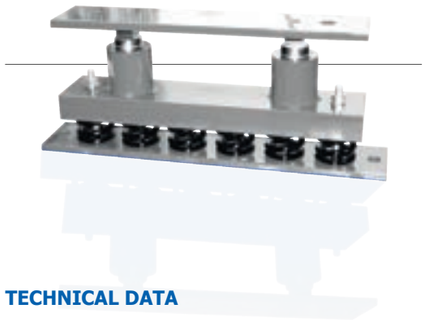

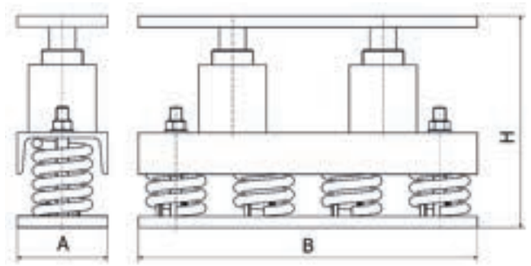


**TECHNICAL DATA**

| **TYP** | **LOAD RAGE** [kN] | **STIFFNESS** verical [N/mm] | **STIFFNESS** horiziontal [N/mm] | **NATURAL FREQUENCY** vertical [Hz] | **A** [mm] | **B** [mm] | **WEIGHT** approx. [kg] |
|---|---|---|---|---|---|---|---|
| **UPM 4113** | 17 - 29 | 1108 | 1108 | 4,0 - 3,1 | 270 | 450 | 35 |
| **UPM 6113** | 26 - 44 | 1662 | 1662 | | 120 | 700 | 41 |

STEEL SPRING ISOLATOR **SERIES UPM DOUBLE-ROW**

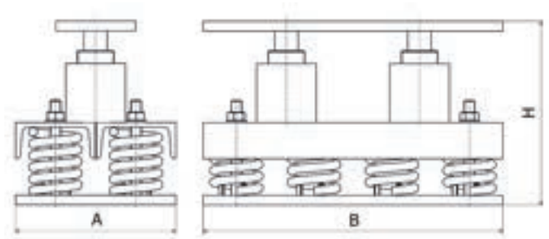


**TECHNICAL DATA**

| **TYP** | **LOAD RAGE** [kN] | **LOAD RAGE** [kN] | **STIFFNESS** horiziontal [N/mm] | **NATURAL FREQUENCY** vertical [Hz] | **A** [mm] | **B** [mm] | **WEIGHT** approx. [kg] |
|---|---|---|---|---|---|---|---|
| **UPM 8113** | 35 - 58 | 2216 | 2216 | 4,0 - 3,1 | 240 | 600 | 58,5 |
| **UPM 10113** | 43 - 73 | 2770 | 2770 | | 240 | 600 | 60 |
| **UPM 12113** | 52 - 87 | 3324 | 3324 | | 240 | 700 | 71 |

## HEADQUARTER

Germany
**CFM Schiller GmbH**
Vennstraße 8 | 52159 Roetgen
info@cfm-schiller.de | www.cfm-schiller.de


## SALES OFFICES

**Belgium | Netherlands | Luxemburg**
AKRON n.v.-s.a.

**T** +32 162 301 03 | **Mobil** +32 4735 100 65
philippe.zwaenepoel@akron.be | www.akron.be

**Brasil**
MTS Sistemas do Brazil Ltda.

**T** +55 115 501 530 0 | **Mobil** +55 1198 479 424 2
vendas@mtsbrasil.com | www.mtsbrasil.com.br

**China**
CFM (Shanghai) Testing Technology Co., Ltd. | Michael Zhao

**T** +86 101 580 078 189 5
michael.zhao@cfmchina.cm.cn | www.cfm-schiller.de

**China**
Shanghai Yueju Test Equipment Co., Ltd | Bill Wang

**T** +86 158 007 671 15
bill.wang@cfm-yjt.com | www.yuejutest.com

**Germany**
Sale north and east germany | Veronika Runzer

**T** +49 394 362 662 33 | **Mobil** +49 0173 213 248 3
veronika.runzer@cfm-schiller.de|www.cfm-schiller.de

**Finland**
Kvalitest Nordic Oy

**T** +35 802 073 060 70
sales@kvalitest.com | www.kvalitest.fi

**France**
CFM Schiller France | Frédéric Mangold

Marc Delaet | **T** +33 6 44 39 69 15
marc.delaet@cfm-schiller.de|www.cfm-schiller.de

Gérard Lacazette | **T** +33 981 035 045
gerard.lacazette@cfm-schiller.de|www.cfm-schiller.de

**Great Britain**
PES (UK) Limited

**T** +44 14 552 512 51
sales@pesukltd.com | www.pesukltd.com

**India**
CFM Schiller India Engineering Pvt Ltd. | Sandeep Vidwans

**T** +91 968 992 157 5
sandeep.vidwans@cfm-schiller.de|www.cfm-schiller.de

**Mexico**
Grupo CTT S.A. de C.V.

**T** +52 449 922 920 003
info@grupoctt.com.mx | www.grupoctt.com.mx

**Poland**
Elhys Sp. z o.o. | Michal Jablonski

**T** + 48 22 863 304 9
mja@elhys.com.pl | www.elhys.com.pl

**Sweden**
Kvalitest Industrial AB

**T** +46 076 525 500 0
sales@kvalitest.com | www.kvalitest.se

**Spain**
Grupo Álava

**T** +34 915 679 700
info@grupoalava.com | www.alava@grupoalava.com

**Turkey**
Vibration Isolation Systems for electrodynamic shakers

**T** +90 216 651 070 0 | **Mobil** +90 5459 634 210
info@starteknik.com.tr | www.starteknik.com

**Turkey**
Test Rig Components

**T** +90 216 326 453 5 (4H Pbx)
megaist@megatr.com | www.megadanismanlik.com.tr

**USA**
CFM-ITBona LLC | Bernd Ruttkowski

**T** +1 952 942 610 4 | **Fax** 9 529 426 108
contact@cfm-itbona.com | www.cfm-itbona.com

**CFM Schiller GmbH**
Special machine construction, specialized in vibration isolation and test bench systems
Managing director Dipl.-Ing. Wolfgang Peters